Transformers for High Harmonic Loads; NLP

Class **7400** / Refer to Catalog **7400CT0301**

Styles D and H–NEMA 2 Rated
verts to NEMA 3R with Weathershield

EE NLP Series Transformers

- Three-phase dry type transformers, 480 Delta—208Y/120 or **208 Delta — 208Y/120**
- Aluminum or copper windings
- Electrostatic shield
- Class 220 insulation
- Double size neutral terminal for additional customer neutral cables
- Additional coil capacity to compensate for higher non-linear load loss
- cULus Listed

Call LynTec — 800-724-4047 for contractor pricing.

kVA	Catalog No.	$ Price	Taps	Weight (lbs)	Enclosure

NLP Series for More Severe Non-Linear Load Service—K-13 Rated—Aluminum Windings; 150° C Rise

kVA	LynTec Part Number 208 Delta - 208Y/120	Square D Part Number 208 Delta - 208Y/120	LynTec Part Number 480 Delta - 208Y/120						
15	NLPA-15-208-208	EE15T211HISNLP	NLPA-15-480-208	15	EE15T3HISNLP		6–2.5% 2+4–	261	17D
30	NLPA-30-208-208	EE30T211HISNLP	NLPA-30-480-208	30	EE30T3HISNLP		6–2.5% 2+4–	365	18D
45	NLPA-45-208-208	EE45T211HISNLP	NLPA-45-480-208	45	EE45T3HISNLP		6–2.5% 2+4–	415	20D
75	NLPA-75-208-208	EE75T211HISNLP	NLPA-75-480-208	75	EE75T3HISNLP		6–2.5% 2+4–	535	21D
112.5	NLPA-112-208-208	EE112T211HISNLP	NLPA-112-480-208	112.5	EE112T3HISNLP		6–2.5% 2+4–	750	22D
150	NLPA-150-208-208	EE150T211HISNLP	NLPA-150-480-208	150	EE150T3HISNLP		6–2.5% 2+4–	755	24D
				225	EE225T3HISNLP		6–2.5% 2+4–	775	25D
				300	EE300T68HISNLP		4–2.5% 2+2–	2350	30D
				500	EE500T68HISNLP		4–2.5% 2+2–	3150	31D

NLP Series for More Severe Non-Linear Load Service—K-13 Rated—Copper Windings; 150° C Rise

kVA	LynTec Part Number 208 Delta - 208Y/120	Square D Part Number 208 Delta - 208Y/120	LynTec Part Number 480 Delta - 208Y/120						
15	NLPC-15-208-208	EE15T211HISCUNLP	NLPC-15-480-208	15	EE15T3HISCUNLP		6–2.5% 2+4–	260	17D
30	NLPC-30-208-208	EE30T211HISCUNLP	NLPC-30-480-208	30	EE30T3HISCUNLP		6–2.5% 2+4–	430	18D
45	NLPC-45-208-208	EE45T211HISCUNLP	NLPC-45-480-208	45	EE45T3HISCUNLP		6–2.5% 2+4–	730	20D
75	NLPC-75-208-208	EE75T211HISCUNLP	NLPC-75-480-208	75	EE75T3HISCUNLP		6–2.5% 2+4–	640	20D
112.5	NLPC-112-208-208	EE112T211HISCUNLP	NLPC-112-480-208	112.5	EE112T3HISCUNLP		6–2.5% 2+4–	985	22D
150	NLPC-150-208-208	EE150T211HISCUNLP	NLPC-150-480-208	150	EE150T3HISCUNLP		6–2.5% 2+4–	1135	24D
				225	EE225T3HISCUNLP		6–2.5% 2+4–	1477	24D
				300	EE300T68HISCUNLP		4–2.5% 2+2–	2650	30D

Note: Lugs: Furnished by customer — see next page for lug kits

Return to Submittal Selector for other models

Enclosure styles, from Dimensions Table, page 14-8.

Enclosures and Accessories

www.LynTec.com
800-724-4047
8-5 M-F Central time

Enclosure Dimensions and Accessories

Enclosure Number/ Style		Height in	Height mm	Width in	Width mm	Depth in	Depth mm	Mounting	Weathershield	Wall Mounting Bracket	Ceiling Mounting Bracket	Insulation Class °C
17	D	27.00	686	20.00	508	16.00	406	Floor	WS363	WMB361362	CMB363	220
18	D	30.00	762	20.00	508	20.00	508	Floor	WS363	WMB363364	CMB363	220
19												
20	D	37.00	940	30.00	762	20.00	508	Floor	WS364	WMB363364	CMB364	220
21	D	37.00	940	30.00	762	24.00	610	Floor	WS364	—	CMB364	220
22	D	43.75	1111	32.00	813	27.00	686	Floor	WS380	—	CMB380	220
24	D	49.5	1257	35	889	28.5	724	Floor	WS381	—	CMB381	220

Lug Kits; Wall and Ceiling Mounting Brackets; Sound Levels

New! **Primary Mechanical Lug Kits**

Call LynTec — 800-724-4047 for contractor pricing.

LynTec Part Number Ships with Transformer	Catalog No.	$ Price Per Kit	Lugs Per Kit	Wire Range	Cap Screws	Current Range
LKP-100	7400DASKP100		3	1/0–14 STR.	1/4 x 1 in	Up to 100 A
LKP-250	7400DASKP250		3	350 kcmil–6 STR.	1/4 x 1 in	101 to 250 A
	7400DASKP400		3	600 kcmil–4 STR. (2) 250 kcmil–1/0 STR.	1/4 x 1 ¾ in	201 to 400 A
	7400DASKP600		6	600 kcmil–4 STR. (2) 250 kcmil–1/0 STR.	1/4 x 1 ¾ in	601 to 800 A
	7400DASKP1000		9	600 kcmil–2 STR.	3/8 x 2 in	601 to 800 A
	7400DASKP1200		12	600 kcmil–2 STR.	3/8 x 2 in	801 to 1200 A

New! **Secondary Mechanical Lug Kits**

LynTec Part Number Ships with Transformer	Catalog No.	$ Price Per Kit	Lugs Per Kit	Wire Range	Cap Screws	Current Range	Bonding Lugs per Kit	Wire Range
LKS-100	7400DASKS100		5	1/0–14 STR.	1/4 x 1 in	Up to 100 A	1	2–14 STR.
LKS-250	7400DASKS250		5	350 kcmil–6 STR.	1/4 x 1 in	101 to 250 A	1	2–14 STR.
	7400DASKS400		5	600 kcmil–4 STR. (2) 250 kcmil–1/0 STR.	1/4 x 1 ¾ in	201 to 400 A	1	1/0–14 STR.
	7400DASKS600		10	600 kcmil–2 STR.	1/4 x 1 ¾ in	601 to 800 A	1	250 kcmil–6 STR.
	7400DASKS1000		15	600 kcmil–2 STR.	3/8 x 2 in	601 to 800 A	1	250 kcmil–6 STR.
	7400DASKS1200		20	600 kcmil–2 STR.	3/8 x 2 in	801 to 1200 A	1	250 kcmil–6 STR.
	7400DASKS2000		25	600 kcmil–2 STR.	3/8 x 2 in	1201 to 2000 A	1	350 kcmil–6 STR.

Weathershields, Wall and Ceiling Mounting Brackets

Weathershields		Wall Mounting Brackets ♦	
Catalog No.	$ Price	Catalog No.	$ Price
WS363		WMB361362	
WS364		WMB363364	
WS370A			★
WS380			
WS381		CMB363	
		CMB364	
		CMB380	
		CMB381	

♦ Wall mounting brackets may be prohibited in some California areas requiring 12-inch spacing from wall.
★ Base Channels are supplied for ceiling mounting–trapeze hangers must be furnished by user.
Note: Lugs are not supplied with transformer units. They must be purchased separately.

Sound Levels

kVA	NEMA Standard Sound Level
0–9	40 dB
10–50	45 dB
51–150	50 dB
151–300	55 dB
301–500	60 dB
501–700	62 dB
701–1000	64 dB

Note: Square D transformers meet NEMA standards for sound level.
Lower sound levels are available at an additional charge.

www.LynTec.com
800-724-4047
8-5 M-F Central time

LynTec NLPA-45-480-208

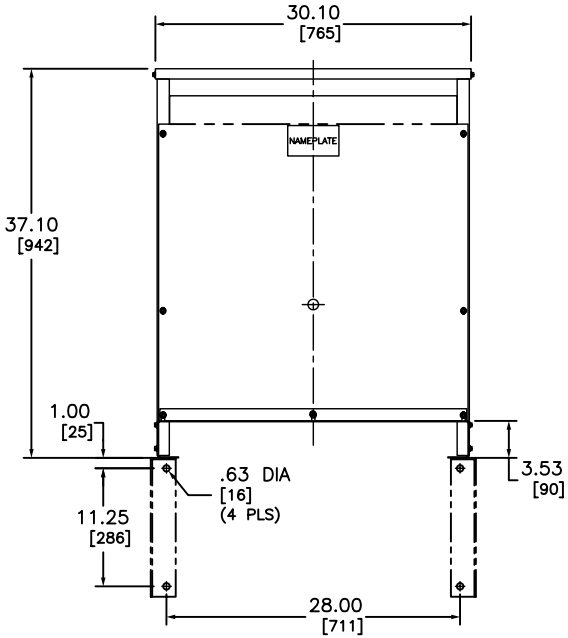

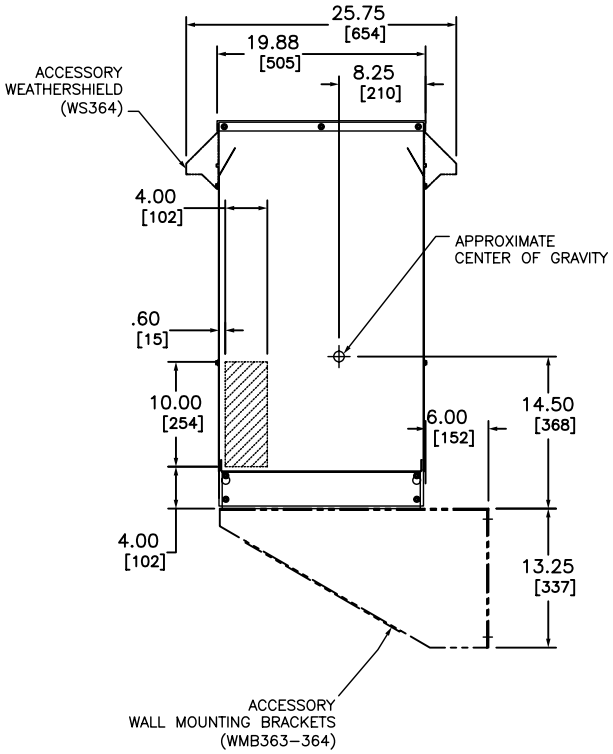

IN EACH PHASE CONNECT TO TAPS	
PRIMARY VOLTS	2–2.5% FCAN 4–2.5% FCBN
504	1
492	2
480	3
468	4
456	5
444	6
432	7

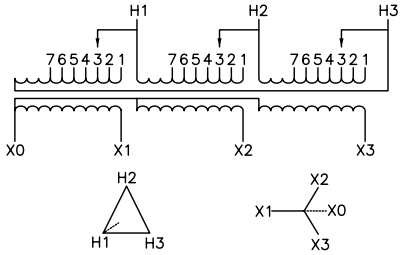

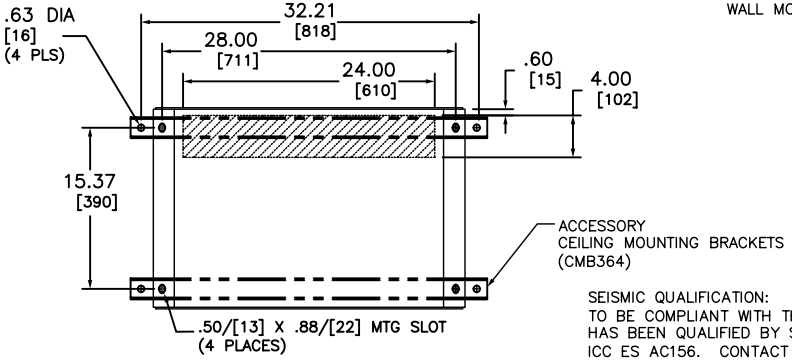

TRANSFORMER SPECIFICATIONS:

45 KVA 3Ø 60 HZ
PRIMARY VOLTAGE 480 DELTA
SECONDARY VOLTAGE 208Y/120
150°C RISE ABOVE 40°C AMBIENT
220°C INSULATION SYSTEM
ALUMINUM WINDINGS
APPROXIMATE WEIGHT: 525 LBS
GUARANTEED SOUND LEVEL: 45 dB
EFFICIENCY @35%: 97.7% AVG. CONFORMS
TO NEMA TP 1 – 2002
K–FACTOR RATING 13

SEISMIC QUALIFICATION:
TO BE COMPLIANT WITH THE SEISMIC REQUIREMENTS OF ASCE/SEI 7, THIS UNIT HAS BEEN QUALIFIED BY SHAKE TABLE TESTING THROUGH SELF CERTIFICATION TO ICC ES AC156. CONTACT YOUR LOCAL SCHNEIDER ELECTRIC/SQUARE D REPRESENTATIVE FOR RELATED QUESTIONS.

NOTES:
1) cULus LISTED (MEETING UL 1561 AND CSA C22.2)
2) NEMA 2 VENTILATED ENCLOSURE
ENCLOSURE RATED FOR NEMA 3R WHEN OPTIONAL WEATHERSHIELD ACCESSORY IS INSTALLED.
3) MINIMUM CLEARANCE OF 3.00[76] BETWEEN VENT OPENINGS, WALL OR OTHER OBSTRUCTION
4) SHADED AREAS DENOTE CUSTOMER CONDUIT ENTRANCE LOCATIONS, AVAILABLE BOTH SIDES AND BOTTOM

DUAL DIMENSIONS: INCHES / MILLIMETERS

LOW VOLTAGE ENERGY EFFICIENT, TP1
NON–LINEAR, K–RATED, DRY–TYPE TRANSFORMER
CATALOG NO EE45T3HISNLP
3 PHASE, 45kVA, AL
PRIMARY 480 DELTA ,SECONDARY 208Y/120

SQUARE D
Schneider Electric

DWG# NO. 6312–0449

OCTOBER 2006

SHEET 1 OF 1

139-0459-00.1_NLPA-45-480-208